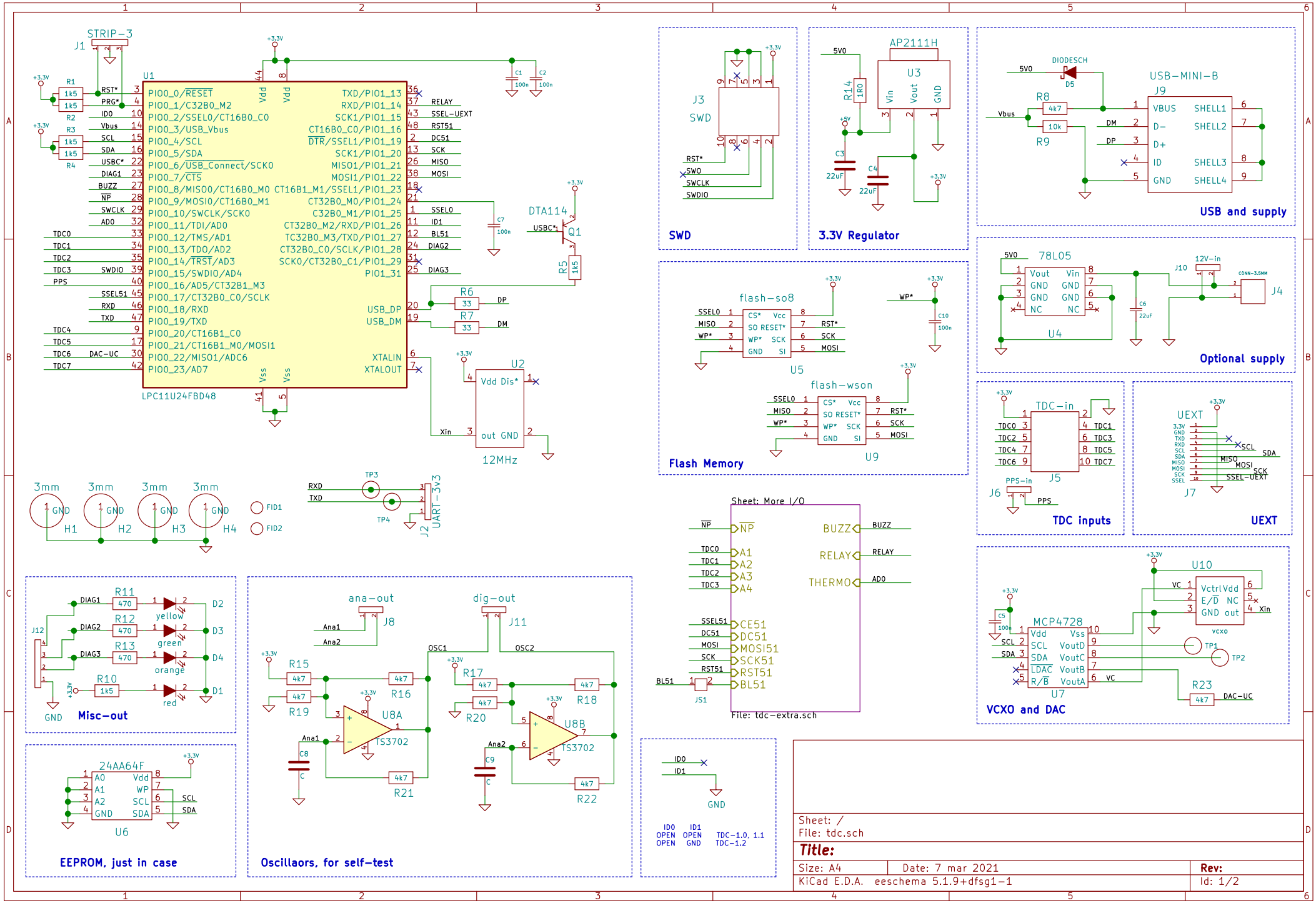
STRIP-3
J1
U1
LPC11U24FBD48
PIO0_0/RESET
PIO0_1/C32B0_M2
PIO0_2/SSEL0/CT16B0_C0
PIO0_3/USB_Vbus
PIO0_4/SCL
PIO0_5/SDA
PIO0_6/USB_Connect/SCK0
PIO0_7/CTS
PIO0_8/MISO0/CT16B0_M0
PIO0_9/MOSI0/CT16B0_M1
PIO0_10/SWCLK/SCK0
PIO0_11/TDI/AD0
PIO0_12/TMS/AD1
PIO0_13/TDO/AD2
PIO0_14/TRST/AD3
PIO0_15/SWDIO/AD4
PIO0_16/AD5/CT32B1_M3
PIO0_17/CT32B0_C0/SCLK
PIO0_18/RXD
PIO0_19/TXD
PIO0_20/CT16B1_C0
PIO0_21/CT16B1_M0/MOSI1
PIO0_22/MISO1/ADC6
PIO0_23/AD7
TXD/PIO1_13
RXD/PIO1_14
SCK1/PIO1_15
CT16B0_C0/PIO1_16
DTR/SSEL1/PIO1_19
SCK1/PIO1_20
MISO1/PIO1_21
MOSI1/PIO1_22
CT16B1_M1/SSEL1/PIO1_23
CT32B0_M0/PIO1_24
C32B0_M1/PIO1_25
CT32B0_M2/RXD/PIO1_26
TC32B0_M3/TXD/PIO1_27
CT32B0_C0/SCLK/PIO1_28
SCK0/CT32B0_C1/PIO1_29
PIO1_31
USB_DP
USB_DM
XTALIN
XTALOUT
Vdd
Vss
RELAY
SSEL-UEXT
RST51
DC51
SCK
MISO
MOSI
SSEL0
ID1
BL51
DIAG2
DIAG3
DP
DM
R1 1k5
R2 1k5
R3 1k5
R4 1k5
RST*
PRG*
ID0
Vbus
SCL
SDA
USBC*
DIAG1
BUZZ
NP
SWCLK
AD0
TDC0
TDC1
TDC2
TDC3
SWDIO
PPS
SSEL51
RXD
TXD
TDC4
TDC5
TDC6
DAC-UC
TDC7
C1 100n
C2 100n
C7 100n
DTA114
Q1
R5 1k5
R6 33
R7 33
U2
Vdd Dis*
out GND
Xin
12MHz
3mm
GND
H1
H2
H3
H4
FID1
FID2
TP3
TP4
J2
UART-3v3
J3
SWD
RST*
SWO
SWCLK
SWDIO
AP2111H
U3
Vin
Vout
GND
5V0
R14 1R0
C3 22uF
C4 22uF
DIODESCH
D5
USB-MINI-B
J9
VBUS
D-
D+
ID
GND
SHELL1
SHELL2
SHELL3
SHELL4
R8 4k7
R9 10k
78L05
U4
C6 22uF
12V-in
J10
CONN-3.5MM
J4
flash-so8
U5
CS*
SO RESET*
WP*
SCK
SI
C10 100n
flash-wson
U9
TDC-in
J5
J6
PPS-in
PPS
UEXT
J7
Sheet: More I/O
File: tdc-extra.sch
NP
TDC0
TDC1
TDC2
TDC3
SSEL51
DC51
MOSI
SCK
RST51
BL51
JS1
BUZZ
RELAY
THERMO
ADO
U10
MCP4728
VctrlVdd
E/D
NC
GND
out
Xin
vcxo
VoutD
VoutC
VoutB
VoutA
LDAC
R/B
VC
TP1
TP2
R23 4k7
DAC-UC
C5 100n
VCXO and DAC
J12
R10 1k5
R11 470
R12 470
R13 470
D1
D2
D3
D4
red
yellow
green
orange
Misc-out
ana-out
J8
Ana1
Ana2
dig-out
J11
OSC1
OSC2
R15 4k7
R16 4k7
R19 4k7
R21 4k7
U8A
TS3702
C8
R17 4k7
R18 4k7
R20 4k7
R22 4k7
U8B
C9
Oscillaors, for self-test
24AA64F
U6
A0
A1
A2
EEPROM, just in case
IDO
ID1
GND
IDO ID1
OPEN OPEN TDC-1.0, 1.1
OPEN GND TDC-1.2
Sheet: /
File: tdc.sch
Title:
Size: A4
Date: 7 mar 2021
Rev:
KiCad E.D.A. eeschema 5.1.9+dfsg1-1
Id: 1/2

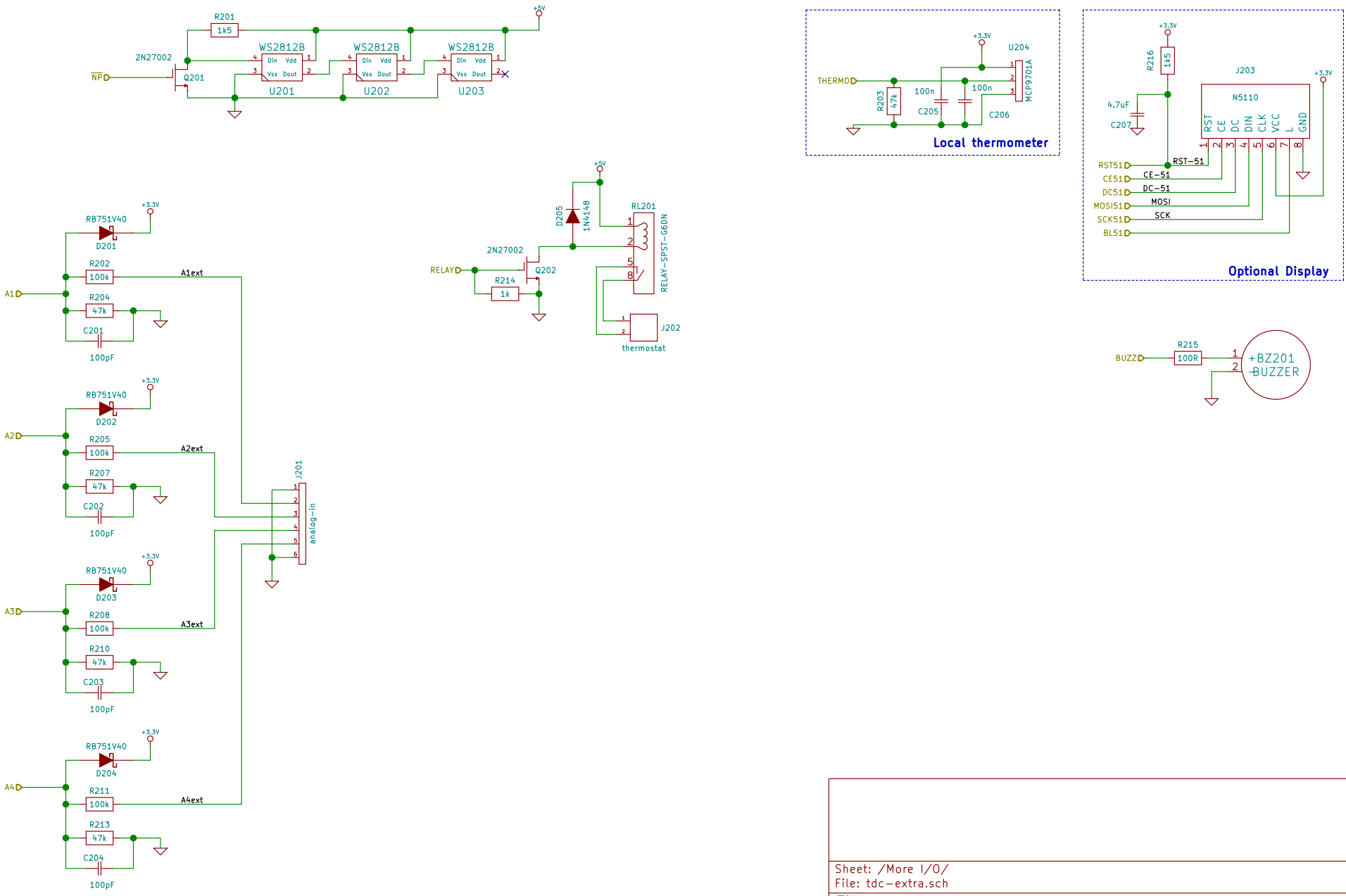

Sheet: /More I/O/
File: tdc-extra.sch

Title:

Size: A4	Date: 7 mar 2021	**Rev:**
KiCad E.D.A. eeschema 5.1.9+dfsg1-1		Id: 2/2